PRODUCT CATALOGUE

URINALS & URINAL TROUGHS

Single urinals and trough urinals in stainless steel for public washrooms, stadiums, transport hubs and secure facilities.



ZHONGSHAN YIJIN STAINLESS STEEL DECORATION CO., LTD.
1 Ying Fu 2 Road, Gang Kou Zhen, Zhongshan, Guangdong 528447, China
T (86) 760 8870 2663 · info@hugemount.com · yijin.com

TONG CHI STAINLESS STEEL ENGINEERING LTD.
G/F., 10-12 Bedford Road, Tai Kok Tsui, Kowloon, Hong Kong
T (852) 2391 3032 · info@tongchi.com.hk · tongchi.com.hk



High Traffic, Low Fuss.

Where washrooms are busy, stainless steel urinals and troughs stay sound and easy to clean.

Single urinals

Shrouded, high-back, flat-back and cylindrical designs.

Trough urinals

Wall-mounted and floor-standing troughs for many users.

Top entry

Top-entry models keep the supply concealed.

Matching parts

Spreaders, wastes and privacy dividers in the accessories range.

12
urinal models

2
families

Wall
or floor standing

Custom
lengths on request

The Range

Click a product to open its page on yijin.com.

SINGLE URINALS



HM-U1-S
Shrouded Wall Mounted Single Urinal



HM-U2
Shrouded Wall Mounted Single Urinal with Oval...



HM-U2S
High Back Wall Mounted Urinal



HM-U2N
Flat Backplate Wall Mounted Urinal



HM-U3
Top Entry Wall Mounted Single Urinal



HM-UR
Cylindrical Wall Mounted Urinal

TROUGH URINALS



HM-UL1
Urinal Trough



HM-UL2
Top Entry Wall Mounted Trough Urinal



HM-UL4
Floor Standing Trough Urinal with Grating



HM-UL5
Top Entry Wall Mounted Trough Urinal with...



HM-UL6
Top Entry Wall Mounted Trough Urinal



HM-UL25
Wall Mounted Trough Urinal

Models & Dimensions



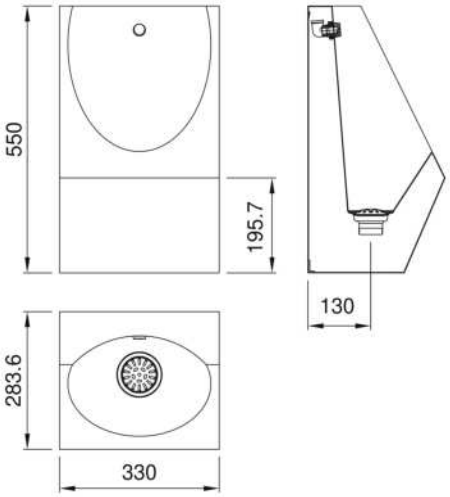

HM-U1-S

Shrouded Wall Mounted Single Stainless Steel Urinal

View online ›



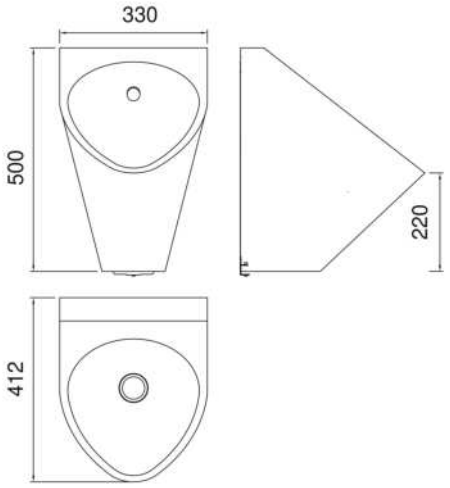

HM-U2

Shrouded Wall Mounted Single Stainless Steel Urinal with Oval Bowl

View online ›



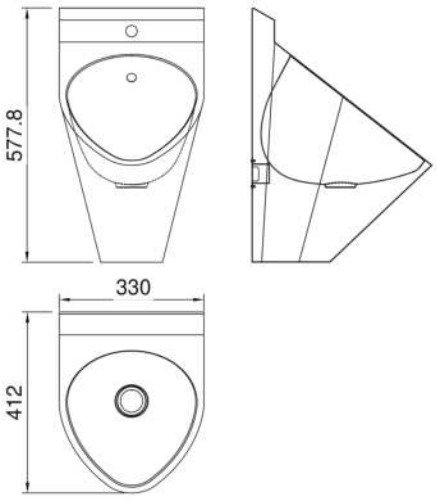

HM-U2S

High Back Wall Mounted Stainless Steel Urinal

View online ›

Models & Dimensions



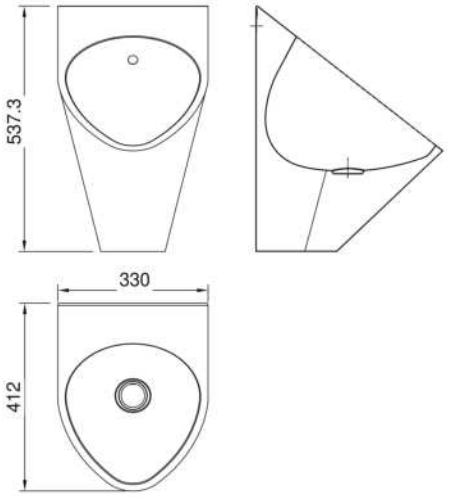

HM-U2N

Flat Backplate Wall Mounted Stainless Steel Urinal

View online ›



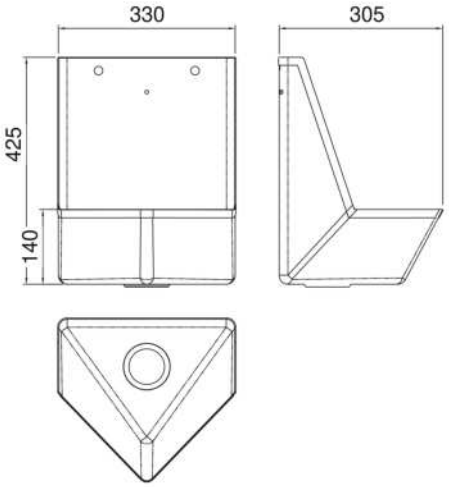

HM-U3

Top Entry Wall Mounted Single Stainless Steel Urinal

View online ›



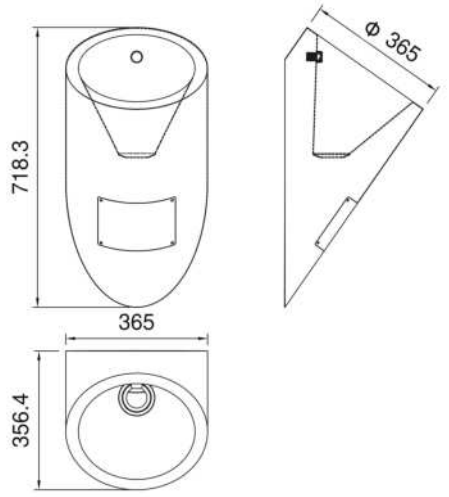

HM-UR

Cylindrical Wall Mounted Stainless Steel Urinal

View online ›

Models & Dimensions



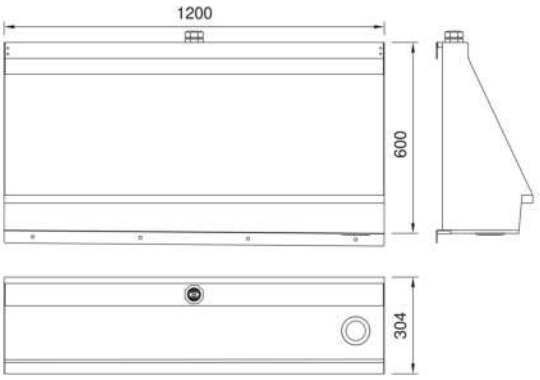

HM-UL1

Stainless Steel Urinal Trough

View online ›



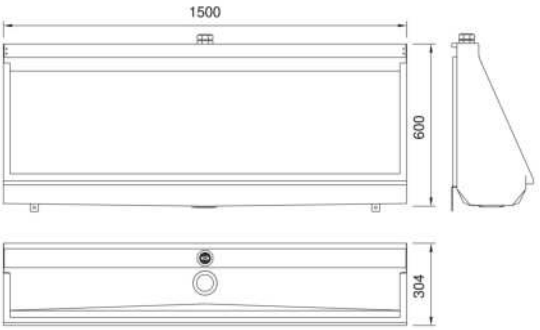

HM-UL2

Top Entry Wall Mounted Stainless Steel Trough Urinal

View online ›



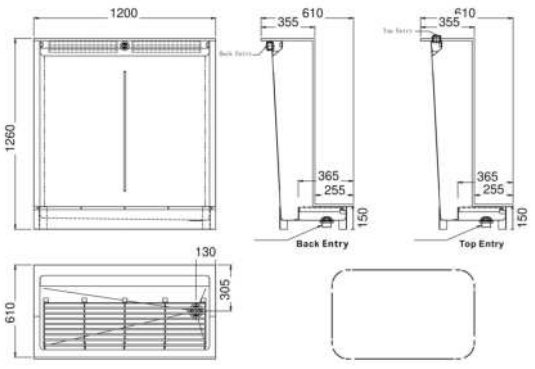

HM-UL4

Floor Standing Stainless Steel Trough Urinal with Grating

View online ›

Models & Dimensions



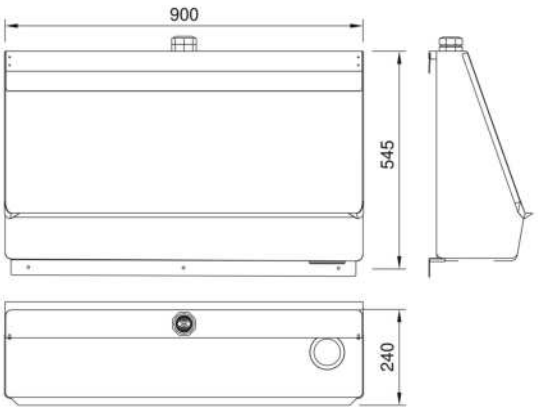

HM-UL5

Top Entry Wall Mounted Stainless Steel Trough Urinal with Mounting Flange

View online ›



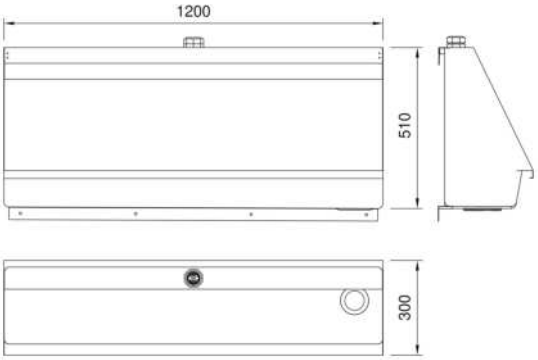

HM-UL6

Top Entry Wall Mounted Stainless Steel Trough Urinal

View online ›



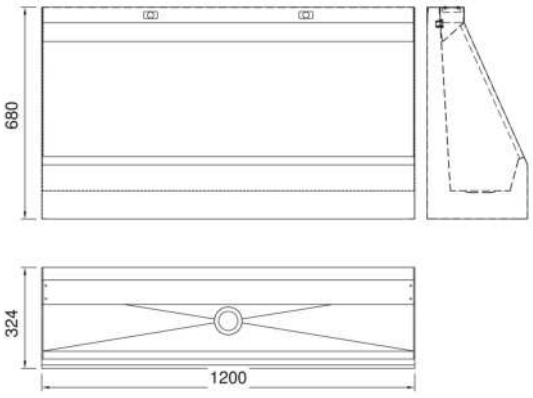

HM-UL25

Wall Mounted Stainless Steel Trough Urinal

View online ›



Why Yijin

Our own factory

Cut, formed, welded and polished in-house in Zhongshan, so we control quality from stainless steel coil to finished product.

Made for projects

Standard models ready to specify, plus the engineering support to adapt them to your site.

Custom work

Need a different size, configuration or finish? Send us your drawing and we will quote a custom unit.

Since 1993

More than thirty years of stainless steel manufacturing for projects in China, Hong Kong and overseas.

ZHONGSHAN YIJIN STAINLESS STEEL DECORATION CO., LTD.
1 Ying Fu 2 Road, Gang Kou Zhen, Zhongshan, Guangdong 528447, China
T (86) 760 8870 2663 · info@hugemount.com · yijin.com

TONG CHI STAINLESS STEEL ENGINEERING LTD.
G/F., 10-12 Bedford Road, Tai Kok Tsui, Kowloon, Hong Kong
T (852) 2391 3032 · info@tongchi.com.hk · tongchi.com.hk