MB-A1

Rectangular Post-Mounted Stainless Steel Mailbox



Mail deposit side



Mail retrieval side

SPECIFICATIONS

Model	MB-A1
Material	304 stainless steel · 1.5 mm
Drawing dimensions	Plan 400 × 300; detail dimensions 240, 90, 25

Dimensions, configuration and supplied items follow the confirmed quotation and order.

MB-A1

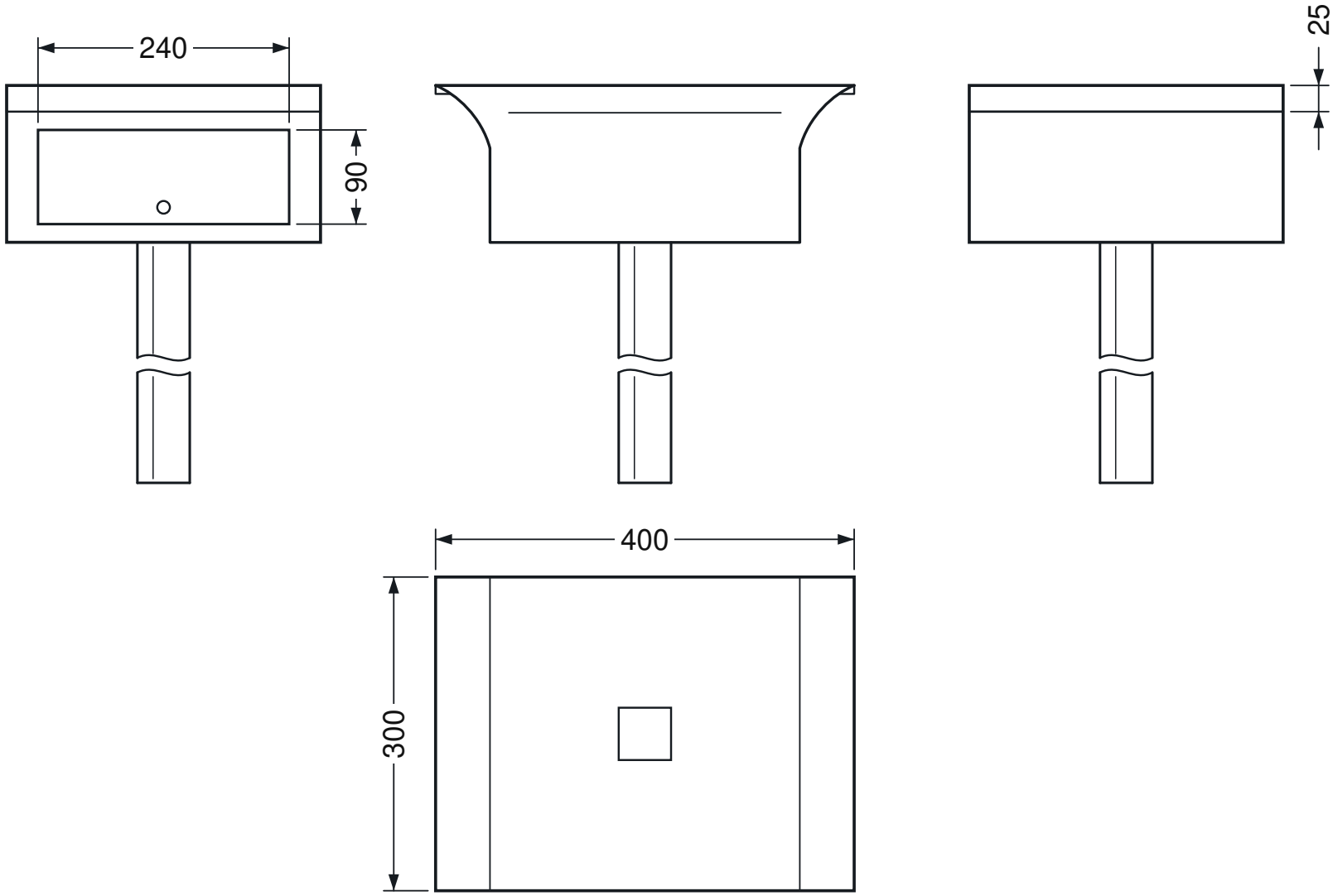

Reference dimensions - confirm installation and order details.

Dimensions in mm. Post height is confirmed per order.