MB-A1

方形立柱式不锈钢信箱

Rectangular Post-Mounted Stainless Steel Mailbox



投信面 / Mail deposit side



取信面 / Mail retrieval side

产品参数 / SPECIFICATIONS

型号 Model	MB-A1
材质 Material	304 不锈钢 · 1.5 mm
图示尺寸 Drawing dimensions	俯视 400 × 300；局部标注 240、90、25

尺寸、配置及供货内容以确认的报价和订单为准。
Dimensions, configuration and supplied items follow the confirmed quotation and order.

MB-A1

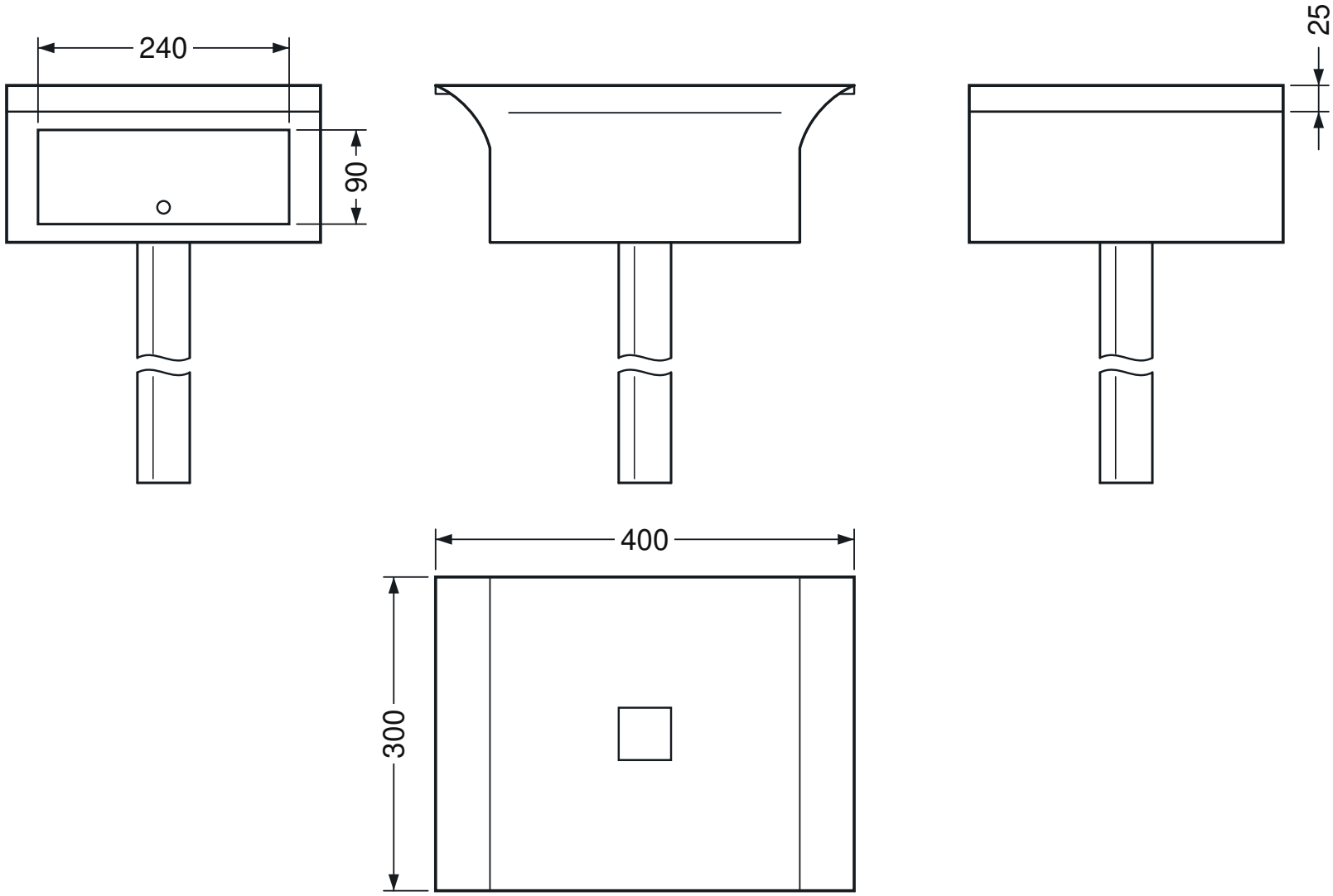

Reference dimensions - confirm installation and order details.

Dimensions in mm. Post height is confirmed per order.