MB-A2

Cylindrical Post-Mounted Stainless Steel Mailbox



Mail deposit side



Mail retrieval side

SPECIFICATIONS

Model	MB-A2
Material	304 stainless steel · 1.5 mm
Drawing dimensions	Body length 400; diameters Ø200, Ø150; mail slot 120 × 25

Dimensions, configuration and supplied items follow the confirmed quotation and order.

MB-A2

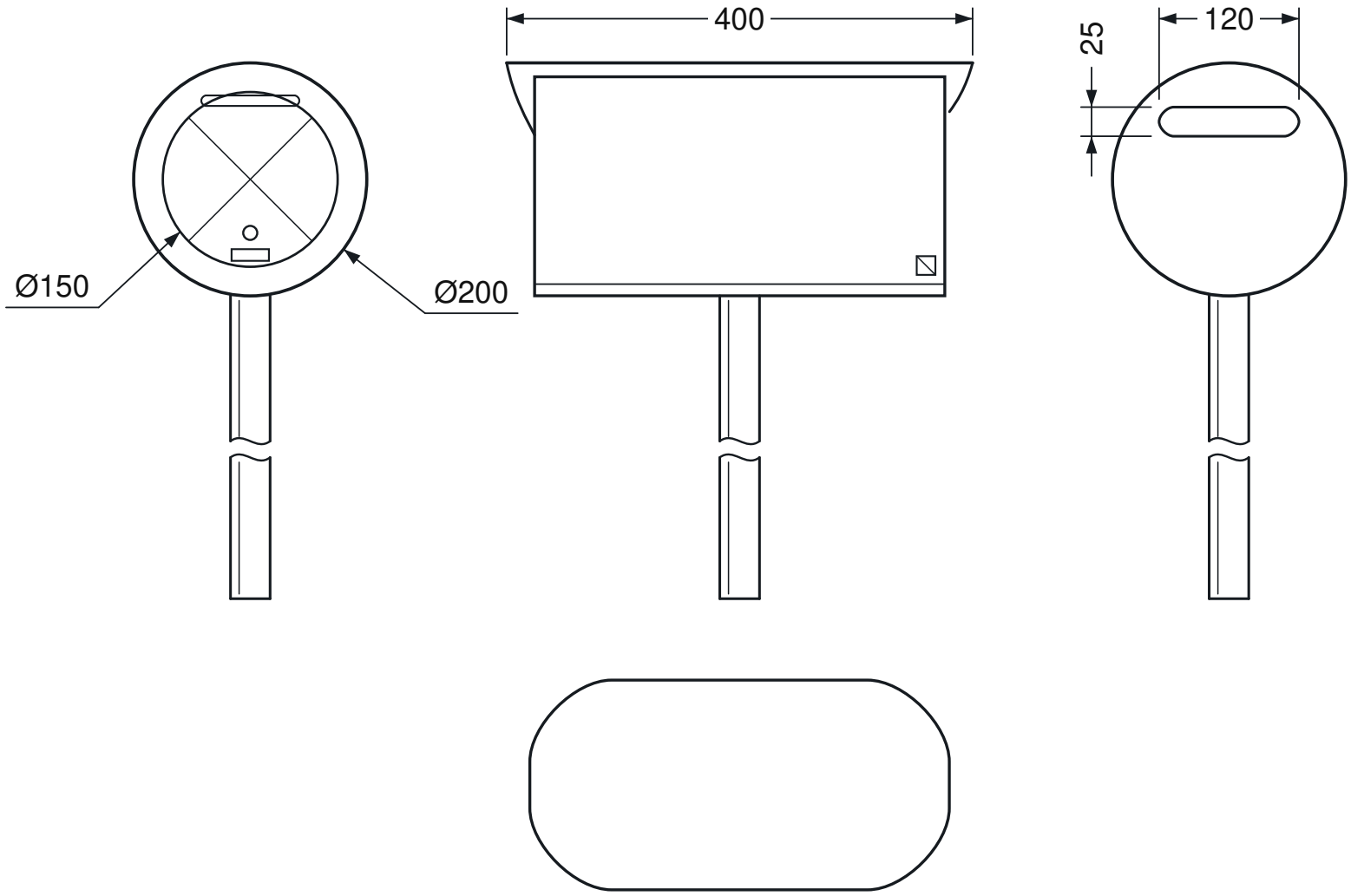

Reference dimensions - confirm installation and order details.

Dimensions in mm. Post height is confirmed per order.