MB-A2

圓筒立柱式不銹鋼信箱

Cylindrical Post-Mounted Stainless Steel Mailbox



投信面 / Mail deposit side



取信面 / Mail retrieval side

產品參數 / SPECIFICATIONS

型號 Model	MB-A2
材質 Material	304 不銹鋼 · 1.5 mm
圖示尺寸 Drawing dimensions	箱體長 400；圓徑 Ø200、Ø150；投信口 120 × 25

尺寸、配置及供貨內容以確認的報價和訂單為準。
Dimensions, configuration and supplied items follow the confirmed quotation and order.

MB-A2

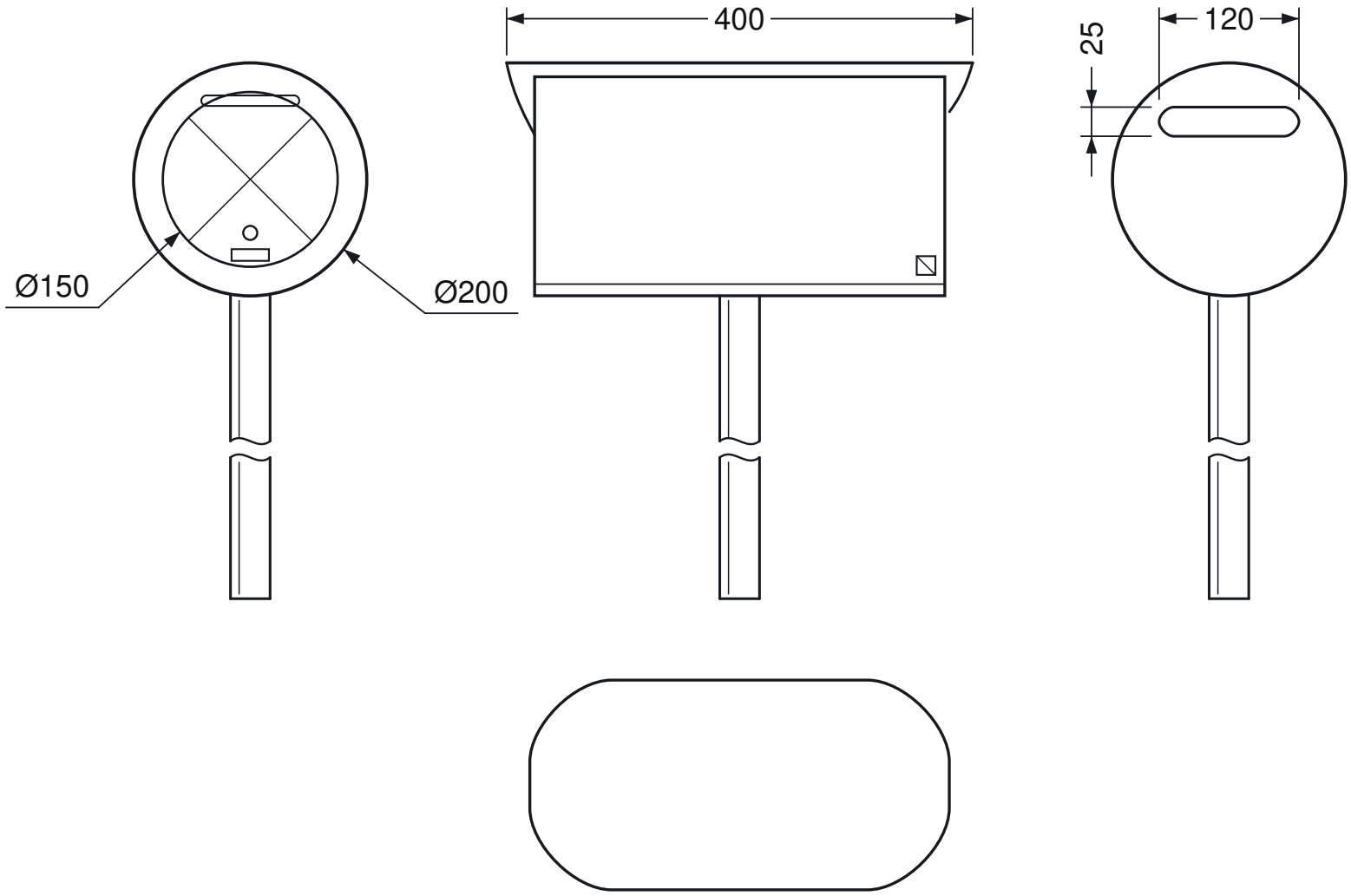

Reference dimensions - confirm installation and order details.

Dimensions in mm. Post height is confirmed per order.