MB-A2

圆筒立柱式不锈钢信箱

Cylindrical Post-Mounted Stainless Steel Mailbox



投信面 / Mail deposit side



取信面 / Mail retrieval side

产品参数 / SPECIFICATIONS

型号 Model	MB-A2
材质 Material	304 不锈钢 · 1.5 mm
图示尺寸 Drawing dimensions	箱体长 400；圆径 Ø200、Ø150；投信口 120 × 25

尺寸、配置及供货内容以确认的报价和订单为准。
Dimensions, configuration and supplied items follow the confirmed quotation and order.

MB-A2

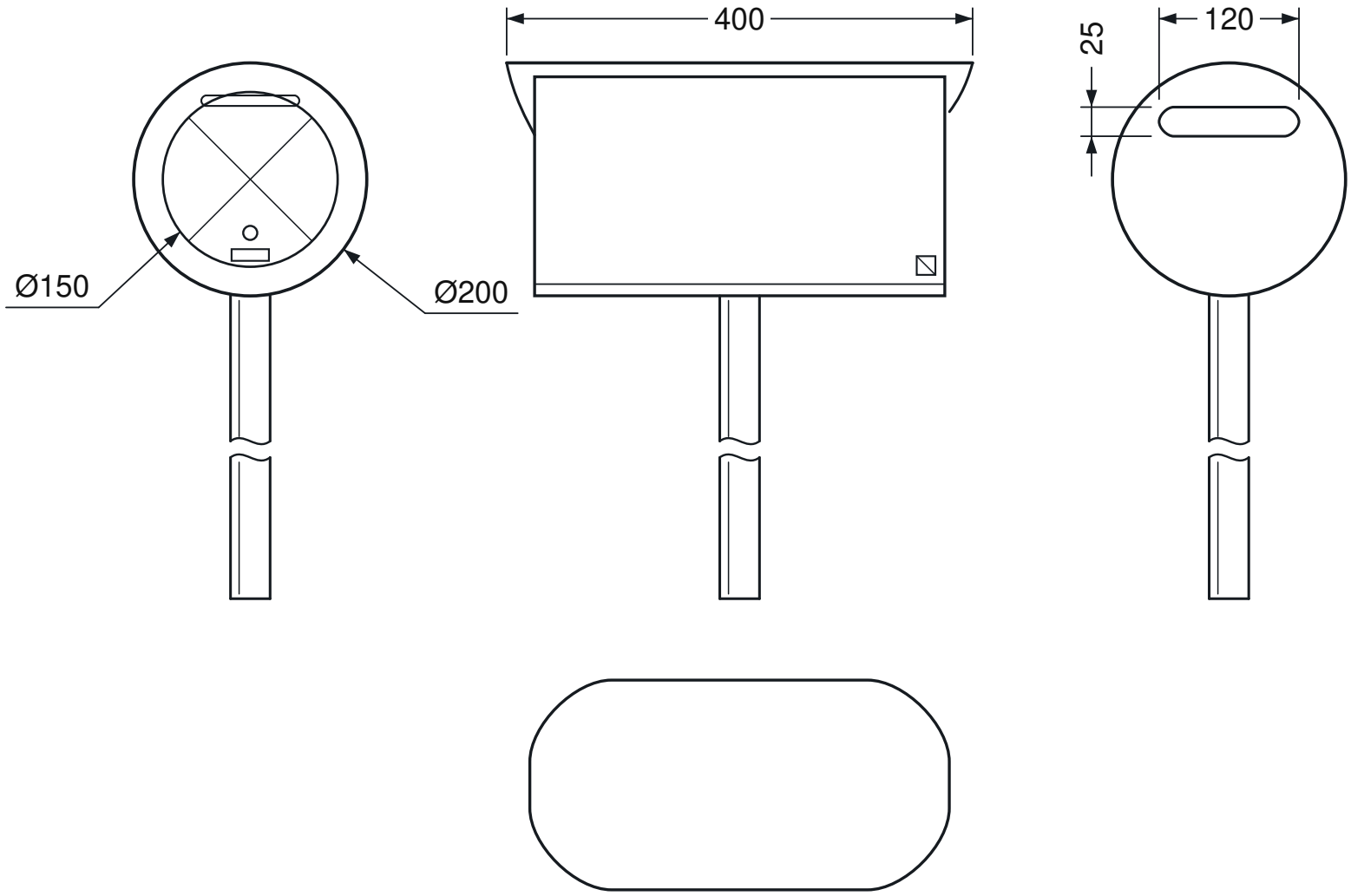

Reference dimensions - confirm installation and order details.

Dimensions in mm. Post height is confirmed per order.